Housing Standard Review & Building Regulation changes outcomes

training LABC

The Housing Standards Review

Aims

- To prevent Planning Authorities imposing local technical requirements on the construction of new dwellings;
- Cuts red tape for developers by removing local standards (e.g. 12 wheelchair accessible housing standards in London alone);
- To wind-down the Code for Sustainable Homes, leaving Part L as the sole energy efficiency delivery mechanism;
- To provide a set of national standards for some issues that can only be applied by Planning Authorities including them in the local plan.

The Housing Standards Review

Outcomes

- Planning may only apply various national standards for space, water efficiency and accessibility where part of the local plan
- A ‘Nationally Described Space Standard’ replaces all other local standards
- Building Regulations Requirement Q1 (Security) is to apply to all new dwellings from 1st October 2015
- Building Regulations Parts G2 and M4 amended to include <u>‘optional requirements’</u> that may be triggered by Planning Conditions

=

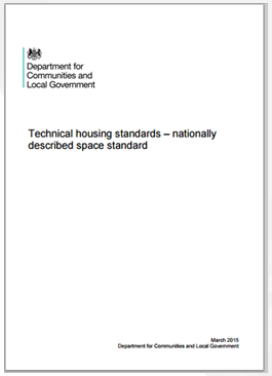

+

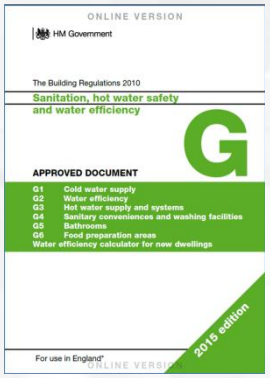

+

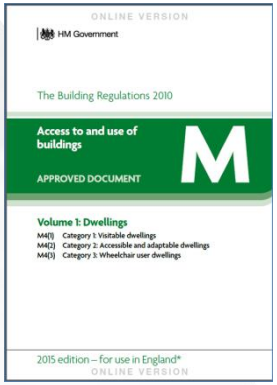

training LABC

The Optional Requirements

Methodology:

- Planning Department gets approval from planning inspectorate to include optional requirements in the local plan;
- Planning make Building Regulations optional requirements part of their conditions for permission;
- The duty is for the developer to inform their Building Control body that optional requirements apply to the submission;
- Building Control check and inspect the dwelling in accordance with the optional requirements;
- Any enforcement of the requirements falls to Building Control and not with planning.

Transition and Implementation

Before Mar 2015	Mar 2015	Oct 2015	Oct 2016
Access (Lifetime Homes)	Can keep-as-is	Keep policy but triggers Part M2	
Access (Wheelchair Housing Design Guide)	Can keep-as-is	Keep policy but triggers Part M3	
Security (Secured by Design - Part 2)	Can keep for 6 months	Part Q applies	
Energy	Policies up to code 4 (Equivalent)		Part L 2016 only
Space	Can keep-as-is	Keep policy but triggers national space standard	
Water	Policies up to code 4 (Equivalent) - 110 lpd	Part G higher standard applies - 110 lpd	
Code for Sustainable Homes	Ends	Except for legacy cases	
Other technical standards e.g. • **materials (sustainability),** • **overheating (internal technical)**	End		

Energy – zero carbon 2016 policy axed

HM Treasury

Fixing the foundations:

Creating a more prosperous nation

- **repeat its successful target from the previous Parliament to reduce net regulation on housebuilders**. The government does not intend to proceed with the zero carbon Allowable Solutions carbon offsetting scheme, or the proposed 2016 increase in on-site energy efficiency standards, but will keep energy efficiency standards under review, recognising that existing measures to increase energy efficiency of new buildings should be allowed time to become established

Cm 9098 July 2015

training LABC

Nationally Described Space Standards

- **Will replace the existing different space standards used by local authorities**

© Presentations and their content are the copyright of LABC

Nationally Described Space Standards

- Sets out requirements for the Gross Internal (floor) Area of new dwellings at a defined occupancy as well as floor areas and dimensions for key parts of the home, notably bedrooms, storage and floor to ceiling height (2.3m for 75% of the dwelling)
- No relationship to the Building Regulations – planning only

Table 1 - Minimum gross internal floor areas and storage (m^2)

Number of bedrooms(b)	Number of bed spaces (persons)	1 storey dwellings	2 storey dwellings	3 storey dwellings	Built-in storage
1b	1p	39 (37)[2]			1.0
	2p	50	58		1.5
2b	3p	61	70		2.0
	4p	70	79		
3b	4p	74	84	90	2.5
	5p	86	93	99	
	6p	95	102	108	
4b	5p	90	97	103	3.0
	6p	99	106	112	
	7p	108	115	121	
	8p	117	124	130	
5b	6p	103	110	116	3.5
	7p	112	119	125	
	8p	121	128	134	
6b	7p	116	123	129	4.0
	8p	125	132	138	

training LABC

Space Standards – what does this all mean?

Gross floor area for
1b = 39m^2 6b=138m^2

One double bed min
11.5m^2 & width 2.75m
others 2.55m

min floor to ceiling height main living space is 2.3m for at least 75% of the Gross Internal Area

Single bed 7.5m^2
& 2.15m w

training LABC

Changes to the Building Regulations

training LABC

Part G – Water Efficiency -1st October 2015

WATER EFFICIENCY ONLINE VERSION G2

The Requirement G2 and Regulation 36

This Approved Document deals with the following Requirement from Part G of Schedule 1 and regulation 36 to the Building Regulations 2010, as amended.

Requirement	*Limits on application*
Water efficiency **G2.** Reasonable provision must be made by the installation of fittings and fixed appliances that use water efficiently for the prevention of undue consumption of water.	Requirement G2 applies only when a dwelling is— (a) erected; or (b) formed by a material change of use of a building within the meaning of regulation 5(a) or (b).
Water efficiency of new dwellings **36.**—(1) The potential consumption of wholesome water by persons occupying a new dwelling must not exceed the requirement in paragraph (2). (2) The requirement referred to in paragraph (1) is either— (a) 125 litres per person per day; or (b) in a case to which paragraph (3) applies, the optional requirement of 110 litres per person per day, as measured in either case in accordance with a methodology approved by the Secretary of State. (3) This paragraph applies where the planning permission under which the building work is carried out— (a) specifies the optional requirement in paragraph (2)(b); and (b) makes it a condition that that requirement must be complied with. (4) In this Part, "new dwelling" does not include a dwelling that is formed by a material change of use of a building within the meaning of regulation 5(g).	

Regulation 36 amended to introduce a <u>new optional requirement</u>

- Estimated water use to be no more than 110 litres per person per day (instead of the normal125 litres per person per day) where a planning authority makes it a condition of planning approval (in line with a policy in the Local Plan) - A policy could apply across a local authority area or just in part

- **Only applies** where required by a planning permission and it then becomes a building regulation matter

- It is the responsibility of the person carrying out the work to inform the BCB if the optional requirement applies

training LABC

Water stress in England

Stress levels:

- Serious
- Moderate
- Low
- Not assessed

1 Anglian Water
2 Bournemouth and West Hampshire Water
3 Bristol Water
4 Cambridge Water
5 Essex and Suffolk Water
6 Folkestone and Dover Water
7 Mid Kent Water
8 Northumbrian Water
9 Portsmouth Water
10 Severn Trent Water
11 South East Water
12 South Staffordshire Water
13 South West Water
14 Southern Water
15 Sutton and East Surrey Water
16 Tendring Hundred Water
17 Thames Water
18 Three Valleys Water
19 United Utilities
20 Wessex Water
21 Yorkshire Water
22 Anglian Water

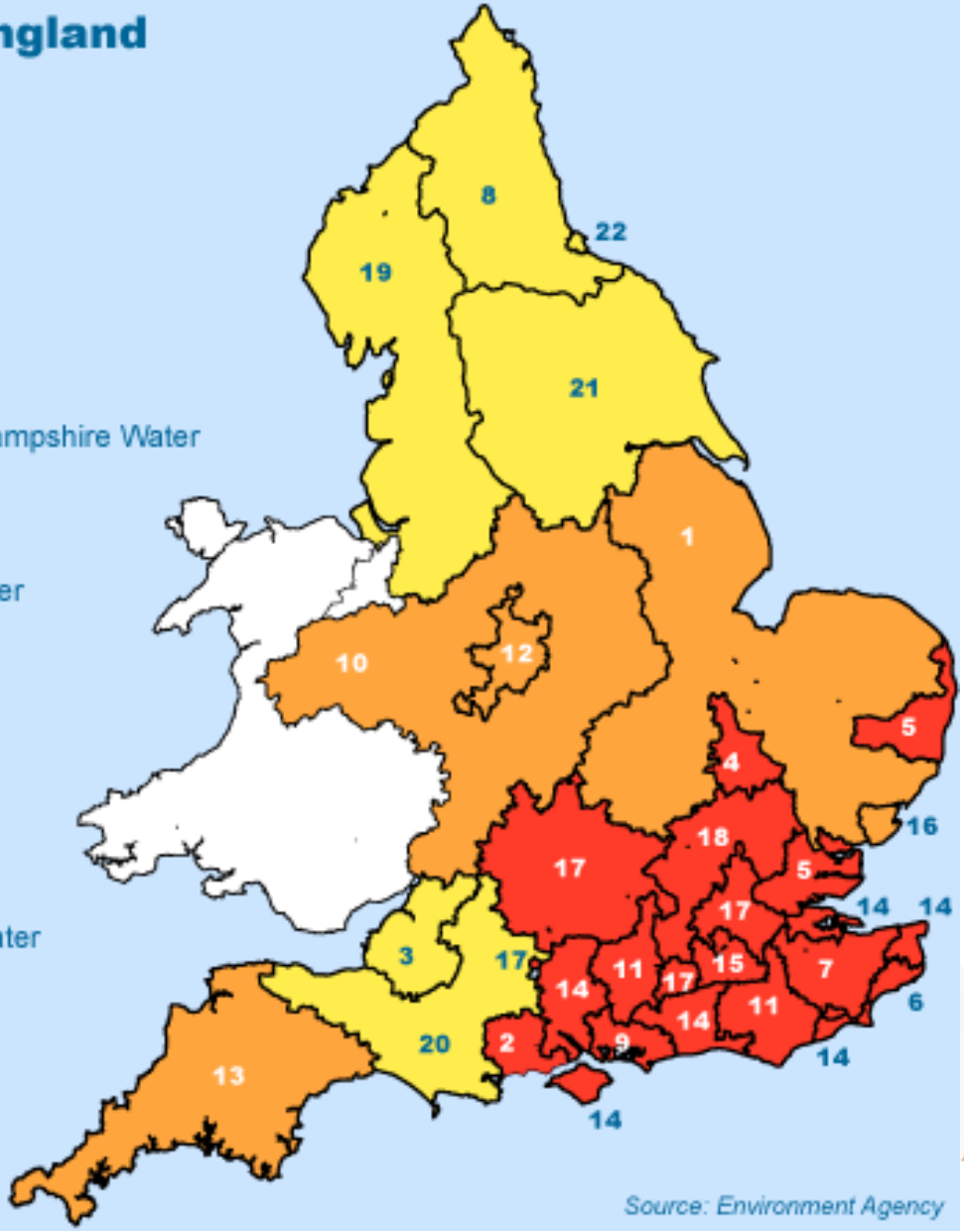

Source: Environment Agency

training LABC

Part G – Water Efficiency

Regulation G2 has been amended to allow for the requirements to be met using a “fittings-based approach”

- This allows compliance to be demonstrated without completing the Water Calculator
- Compliance demonstrated if all fittings at least as efficient as specified in new Tables 2.1 and 2.2
- Where fittings approach used the notice to the BCB should state so
- Consequential changes to the **Water Calculator** have been made -this is now in a new **Appendix A** rather than a stand alone document

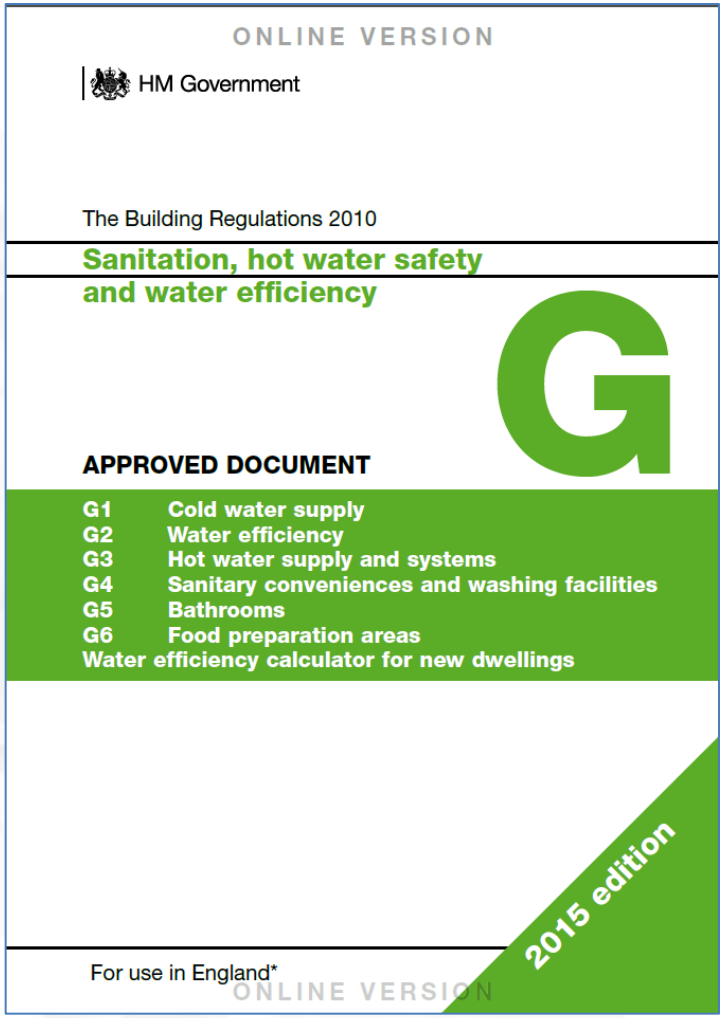
ONLINE VERSION

HM Government

The Building Regulations 2010

Sanitation, hot water safety and water efficiency

G

APPROVED DOCUMENT

G1 Cold water supply
G2 Water efficiency
G3 Hot water supply and systems
G4 Sanitary conveniences and washing facilities
G5 Bathrooms
G6 Food preparation areas
Water efficiency calculator for new dwellings

2015 edition

For use in England*

ONLINE VERSION

The choice is yours: fittings approach or water calculator

Fittings approach

2.5 As an alternative to calculating the water consumption (as paragraph 2.2), a fittings approach that is based on the water efficiency calculator methodology may be used.

2.6 Where the fittings approach is used, the water consumption of the fittings provided must not exceed the values in Table 2.1. If they do not, the Water Efficiency Calculator must be completed to demonstrate compliance. Similarly, where a waste disposal unit, a water softener or water re-use is specified the water efficiency calculator must be completed.

Table 2.1 Maximum fittings consumption

Water fitting	Maximum consumption
WC	6/4 litres dual flush or 4.5 litres single flush
Shower	10 l/min
Bath	185 litres
Basin taps	6 l/min
Sink taps	8 l/min
Dishwasher	1.25 l/place setting
Washing machine	8.17 l/kilogram

2.7 Where the fittings approach is used, the notice given under regulation 37 should state "Less than 125 litres/person/day using fittings approach".

OR

Appendix A – Water efficiency calculator for new dwellings

The water efficiency calculation methodology

A1 This appendix sets out the water efficiency calculation methodology for assessing the whole house potable water consumption in new dwellings. The calculation methodology is to be used to assess compliance against the water performance targets in Regulation 36 as set out below. It is not a design tool for water supply and drainage systems. It is also not capable of calculating the actual potable water consumption of a new dwelling. Behaviour and changing behaviour can also have an effect on the amount of potable water used throughout a home.

Performance target	Maximum calculated consumption of potable water (litres/person/day)
Regulation 36 Para (2)a	125
Regulation 36 Optional requirement Para (2)b	110

A2 The calculation methodology requires the use of water consumption figures provided from manufacturers' product details. Before the assessment can be carried out, figures will need to be collected from manufacturers' product information to determine the consumption of each terminal fitting, including:

a. WCs
   i. Flushing capacity for the WC suite including consumption at full and part flush for dual flush WCs.
   ii. Where multiple WCs are specified with various flushing capacities, the average effective flushing volume must be used as set out in paragraphs A8 and A11.

b. Bidets
   i. Bidets are excluded from the Water Efficiency Calculator for new dwellings due to their minimal water consumption, and although there is insufficient research to quantify this consumption, anecdotal evidence shows that there is evidence that bidets often displace other water consumption rather than increase consumption.

c. Taps
   i. Flow rate of each tap, at full flow rate in litres per minute measured at a dynamic pressure of 3±0.2 bar (0.3±0.02 MPa) for high pressure (Type 1) taps, or at a dynamic pressure of 0.1±0.02 bar (0.01±0.002 MPa) for low pressure (Type 2) taps (BS EN 200:2008, sanitary tapware, single taps and combination taps for supply systems of type 1 and 2. General technical specifications) including any reductions achieved with flow restrictions.
   ii. Where multiple taps are to be provided (e.g. separate hot and cold taps) the flow rate of each tap will be needed in order to calculate an average flow rate in accordance with paragraphs A8 to A10.
   iii. For 'click taps' and other taps with a 'water break', the manufacturer's stated full flow rate should be used to perform calculations (measured as described above). Do not use the flow rate at the break point. A factor for percentage of flow rate is already assumed within the use factor for taps. There is currently no research to provide a separate use factor for 'click taps' so a standard use factor is applied.
   iv. Taps on baths should not be included in the calculation as the water consumption from bath taps is taken account of in the use factor for baths.

d. Baths
   i. Total capacity of the bath to overflow, in litres (excluding displacement, this is already included in the use factor for baths).
   ii. Where multiple baths are specified with various capacities, the average must be used as set out in paragraphs A8 to A10.
   iii. Spa hot tubs are not included in the water efficiency calculator as they are generally not filled on a daily basis and their water consumption over a year is minimal.

e. Dishwashers
   i. Litres per place setting derived from the value quoted on the EU Energy Label, ie. annual water use ÷ (260 × number of place settings).
   ii. Where no dishwasher is to be provided and therefore consumption figures are unknown, a figure of 1.25 litres per place setting must be assumed.
   iii. Where multiple dishwashers are specified with various consumptions, the average must be used as set out in paragraphs A8 to A10.

f. Washing machines
   i. Litres per kilogram of dry load derived from the value quoted on the EU Energy Label, ie. annual water use ÷ (220 × capacity in kg).

Part M - now 2 volumes – 1st October 2015

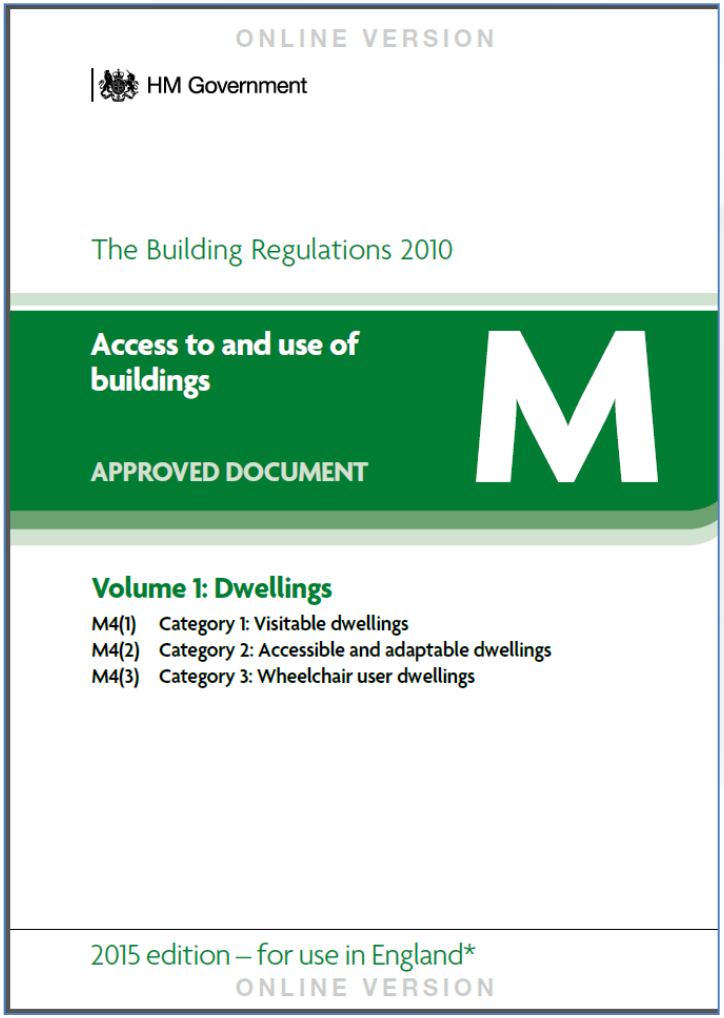
ONLINE VERSION

HM Government

The Building Regulations 2010

Access to and use of buildings

APPROVED DOCUMENT

M

Volume 1: Dwellings

M4(1) Category 1: Visitable dwellings
M4(2) Category 2: Accessible and adaptable dwellings
M4(3) Category 3: Wheelchair user dwellings

2015 edition – for use in England*

ONLINE VERSION

Removed reference M4 (dwellings) in Volume 2

ONLINE VERSION

HM Government

The Building Regulations 2010

Access to and use of buildings

APPROVED DOCUMENT

M

VOLUME 2 – BUILDINGS OTHER THAN DWELLINGS

M1 Access and use of buildings other than dwellings
M2 Access to extensions to buildings other than dwellings
M3 Sanitary conveniences in extensions to buildings other than dwellings

2015 edition

For use in England*

ONLINE VERSION

training LABC

Demographic Time Bomb

10 million people in the UK over 65 years old

5.5 million more elderly in 20 years

19 million by 2050

Part M – Access to and use of buildings

Part M Volume 1 - Dwellings

- New Regulation M4 applies to dwellings only – and is in three parts;
  - M4(1) – Category 1 Visitable Dwellings (as existing)
  - M4(2) – Category 2, Accessible and adaptable dwellings
  - M4(3) – Category 3, Wheelchair user dwellings

Now applies to new dwellings **and** material alterations but **not** an extension to a dwelling. Does not apply to Change of Use (Regulation 5).

Part M Volume 2 – Other than dwellings

Guidance in **Volume 2** for buildings other than dwellings has **not** been changed.

Regulations M1, M2 and M3 will solely apply to buildings other than dwellings;

- Existing Regulation M4 repealed

Part M – Key Definitions

Entrance storey

The floor level (of the dwelling) on which the principal private entrance is located.

Principal private entrance

The entrance to the individual dwelling that a visitor not familiar with the dwelling would normally approach (usually the 'front door' to a house or ground floor flat).

Principal storey

The floor level (of the dwelling) on which the main living space is located, where this is not the entrance storey.

Part M Volume 1 – Dwellings

M4(1) - **Category 1** Visitable dwellings

Requirement	
Requirement	*Limits on application*
Category 1 – visitable dwelling	
Access and use	
M4(1). Reasonable provision should be made for people to— (a) gain access to; and (b) use, the dwelling and its facilities	Requirement M4(1) does not apply to: (a) an extension to a dwelling; or (b) any part of a building that is used solely to enable the building or any service or fitting in the building to be inspected, repaired or maintained.

Key points

- Provision for people to approach dwelling, including wheelchair users, step free where possible.
- Able to access dwelling from most likely point of alighting from a car
- Able to enter the dwelling
- Able to access habitable rooms at entrance storey (or principal storey if entrance storey contains no habitable rooms)
- <u>Able to access a WC at entrance storey (or principal storey if entrance storey contains no habitable rooms)</u>
- A disabled person who can walk can access any dwelling in a building containing dwellings

training LABC

M4(1) – **Visitable Dwellings –** Clearer diagrams provided

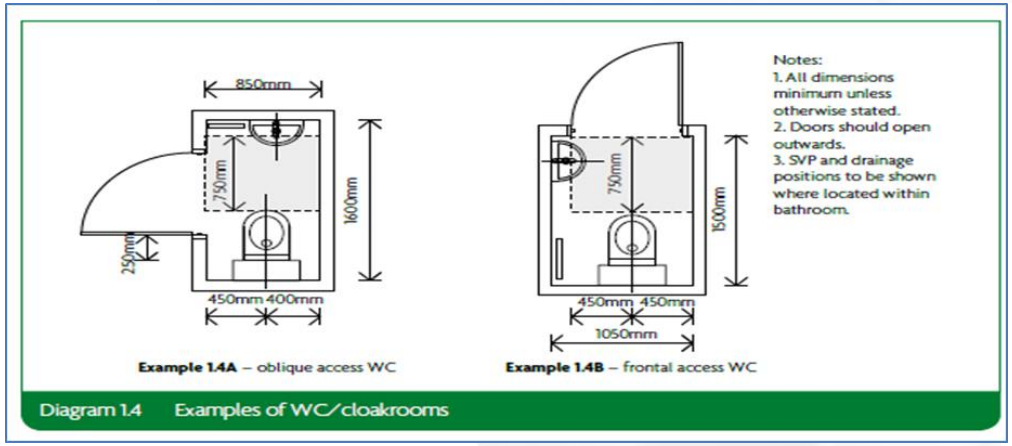

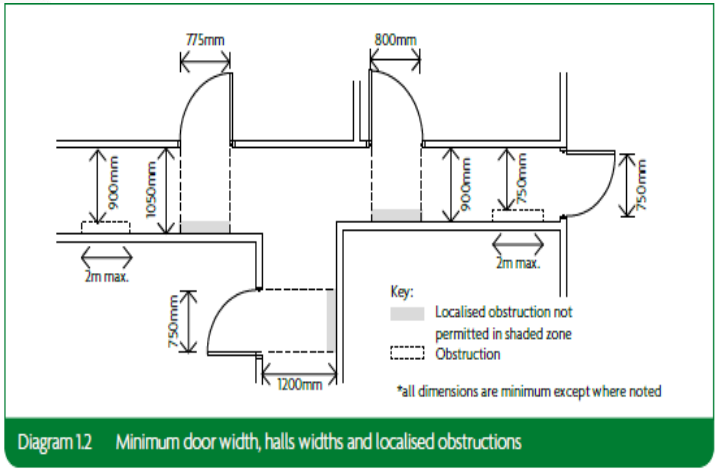

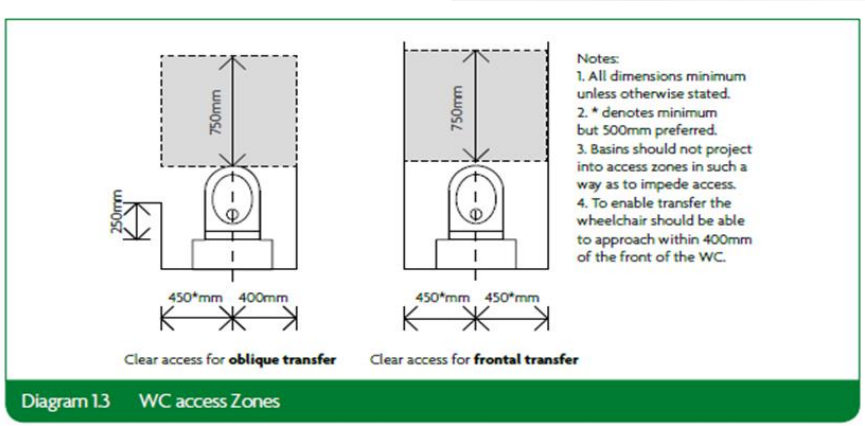

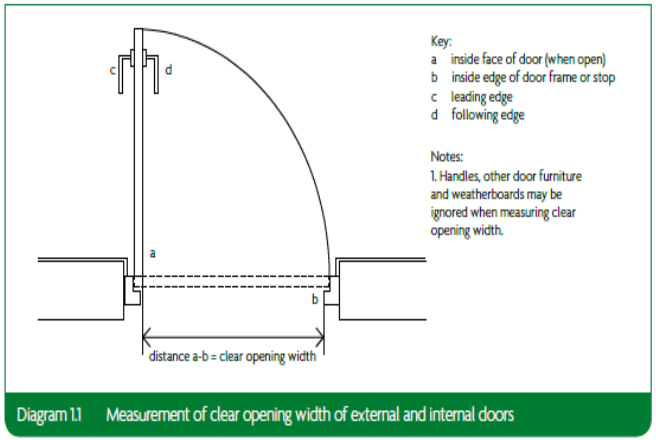

training LABC

M4(1) **Visitable Dwellings – Consumer Unit Position**

- Consumer Units – Position must be set so the switches are between 1350 – 1450mm above floor level.
- This may cause problems on small house designs where they are often sited in high level cupboards or above doors.

Part M Volume 1 – Dwellings

M4(2) – **Category 2** Accessible & Adaptable Dwellings

Requirement	
Optional requirement	*Limits on application*
Part M access to and use of buildings	
Category 2 – accessible and adaptable dwellings	
M4(2) optional requirement	Optional requirement M4(2)—
(1) Reasonable provision must be made for people to—	(a) may apply only in relation to a dwelling that is erected;
(a) gain access to; and	(b) will apply in substitution for requirement M4(1);
(b) use, the dwelling and its facilities.	(c) does not apply where optional requirement M4(3) applies;
(2) The provision made must be sufficient to—	(d) does not apply to any part of a building that is used solely to enable the building or any service or fitting in the building to be inspected, repaired or maintained.
(a) meet the needs of occupants with differing needs, including some older or disabled people; and	
(b) to allow adaptation of the dwelling to meet the changing needs of occupants over time.	

Key points

- Step free access to dwelling, car park space and any communal areas (e.g. waste storage).
- Step free access to WC and any other accommodation within entrance storey
- Step free access to private outdoor space connected directly to entrance storey
- A wider range of people including the elderly, disabled people and some wheelchair users can use the accommodation and its facilities
- Able to be adapted in the future

training LABC

M4(2) – **Accessible and Adaptable Dwellings -** Approach to the dwelling

- Access routes must be step free, regardless of storey dwelling is on.
- Where a communal ramp is used that is more than 300mm high there must also be a stepped approach.
- Where step-free access not possible to the principal private entrance there must be step free access to an alternative private entrance.
- Gates on access route to have minimum clear opening of 850mm and minimum 300mm clear zone to leading edge
- Paths minimum 900mm width (private) or 1200mm (communal)
- Max gradient of ramp 1:12

M4(2) **Accessible and Adaptable Dwellings -** Car parking

Where parking is provided…

- Private in curtilage :
  - 1 standard space (2.4 x 4.8m) that can be widened to 3.3m (not a garage or car port)

- Communal to blocks of flats:
  - 1 standard space close to communal entrance
  - 900mm access zone to side, and
  - Dropped kerbs min 1m wide, max 1:12

- Parking drop off, where provided
  - Close to communal entrance
  - Level or gently undulating
  - Suitable firm ground surface

training LABC

M4(2) **Accessible and Adaptable Dwellings -** Communal entrances

- Min clear opening of door 850mm.
- 1500 x 1500mm level landing.
- Landing is covered to 1200 x 900mm.
- Accessible threshold.
- Automatic lighting.
- 300mm leading edge maintained for 1200mm.
- Max 200mm deep reveal.
- If M4(2) dwellings are above ground floor then a passenger lift must be provided
- Stairs to Part K ‘General Access’

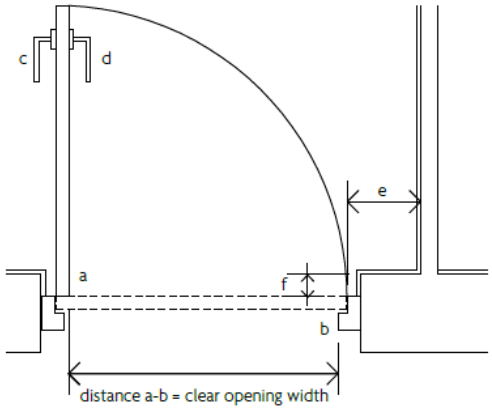

Key:
a inside face of door (when open)
b inside edge of door frame or stop
c leading edge
d following edge
e nib to leading edge (300mm min)
f reveal depth (200mm max to door face when closed)

Notes:
1. Handles, other door furniture and weatherboards may be ignored when measuring clear opening width.
2. Skirting boards may be ignored when measuring door nibs (from finished wall face to inside edge of door frame).

*all dimensions are minimum except where noted

Diagram 2.2 Measurement of clear opening width and other features of external and internal doors

M4(2) **Accessible and Adaptable Dwellings** – Principal Private Entrances (or Alternative Private Entrances)

- 1200 x 1200mm external landing.
- Landing covered min 900 x 600mm.
- Automatic lighting.
- Minimum clear door width 850mm.
- 300mm nib to leading edge, maintained for 1200mm.
- Max 200mm deep reveal.
- Accessible threshold.
- Porch or lobby minimum 1500m between doors and door swings.

- All external private spaces to be served by doors meeting provisions for width, threshold, reveal and leading edges.

M4(2) **Accessible and Adaptable Dwellings** – Internal circulation and layout

- Corridors and doors to be wider, leading edge requirements to doors apply – see diagram 2.3
- Access to all rooms within the entrance storey is step-free.
- All other storeys are step-free ‘where possible’.
- Stairs meet Part K ‘Private Stair’.
- Stair width minimum 850mm at a height 450mm above pitch line (to allow future stairlift provision)
- Entrance storey must contain a living area (living / dining room) with a window max 850mm above floor level

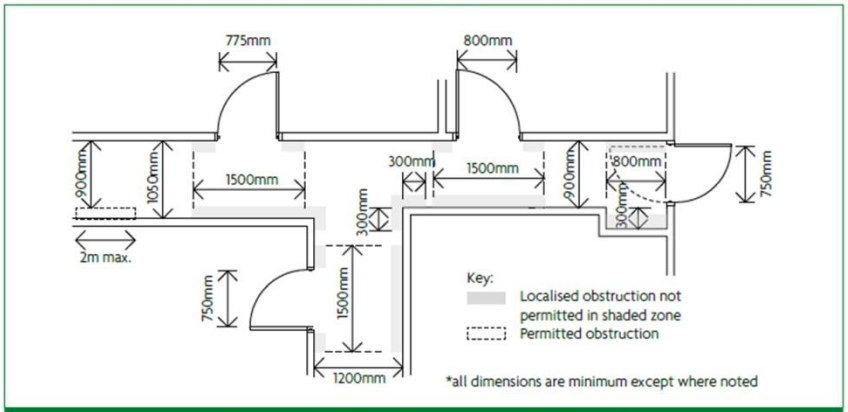

Diagram 2.3 Minimum door and hall widths and restrictions on localised obstructions

M4(2) **Accessible and Adaptable Dwellings** – Bedrooms

- Every bedroom: a clear access route 750mm wide from the doorway to the window (when bed in place).
- Principal bedrooms (double): Clear access of 750mm to both sides and the foot of the double bed.
- All other double bedrooms: clear access of 750mm to one side and the foot of the bed.
- All other single or twin bedrooms: clear access of 750mm to one side of the bed.
- Demonstrate compliance through Appendix D furniture schedule – should be shown on plan (e.g. diagram 2.4)

D ONLINE VERSION

Appendix D: Furniture schedule

Space	Furniture to be shown	Fruniture size (mm)	Number bedspaces / number furniture items required						
			2	3	4	5	6	7	8
Living space	Arm chair (or number sofa seats in addition to minimum sofa provision)	850x850	2	3	1	2	3	4	1
	2 seat settee (optional)	850x1300							
	3 seat settee	850x1850			1	1	1	1	
	TV	220x650	1	1	1	1	1	1	1
	coffee table	500x1050 or 750 diameter							
	occasional table	450x450							
	storage units	500 x length shown (1 only required)	1000	1000	1500	2000	2000	2000	
Dining space	dining chair		2	3	4	5	6	7	+
	dining table	800 x length shown (1 only required)	800	1000	1200	1350	1500	1650	
Bedrooms									
Double Bedroom	Principal bedroom double bed: or	2000x1500	1	1	1	1	1	1	1
	Other double bedroom double bed: or	1900x1350	1	1	1	1	1	1	1
	single bed (2 number in twin)	1900x900	2	2	2	2	2	2	2
	bedside table	400x400	2	2	2	2	2	2	2
	desk and chair	500x1050	1	1	1	1	1	1	1
	chest of drawers	450x750	1	1	1	1	1	1	1
	double Wardrobe	600x1200	1	1	1	1	1	1	1
Twin bedroom	single bed (2 number in twin)	1900x900			2	2	2	2	2
	bedside table	400x400			2	2	2	2	2
	chest of drawers	450x750			1	1	1	1	1
	table and chair	500x1050			1	1	1	1	1
	double wardrobe	600x1200			1	1	1	1	1
Single Bedroom	single bed	1900x900		1	1	1	1	1	1
	bedside table	400x400		1	1	1	1	1	1
	chest of drawers	450x750		1	1	1	1	1	1
	table and chair	500x1050		1	1	1	1	1	1
	double wardrobe	600x1200		1	1	1	1	1	1
Bathrooms	WC + cistern	500x700							
	Bath	700x1700							
	Wash hand basin	600x450							
Activity zone									
Bedrooms	Manoeuvring square as per requirements	1200x1200							
Living rooms	Turning circle: or	1500x1500							
	Turning ellipse	1400x1700							

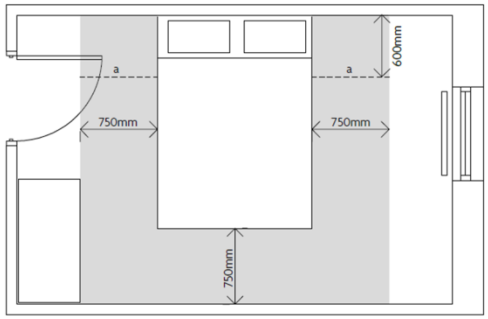

Notes:
1. Clear access required to window and no localised obstructions intruding on access zone.
2. Bedside furniture permitted in zone 'a'.
3. Bed size in accordance with the furniture schedule in Appendix D.

*all dimensions are minimum except where noted

Diagram 2.4 Clear access zones to principal bedroom

training LABC

M4(2) **Accessible and Adaptable Dwellings** – Entrance Level Sanitary Facilities

- Every dwelling: All sanitary accom. walls, ducts and boxings to resist 1.5kN/m2 imposed load (ply lining for future handrail provision)
- Every dwelling: Entrance storey W.C. and basin.
- Every dwelling: Outward opening door to provision.
- Dwelling of 2-3 storeys, 1-2 bedrooms, W.C. complies with diagram 1.3
- Dwelling of 2-3 storeys, 3 or more beds, the W.C. also requires a level access shower or ‘potential level access shower’ unless there is an accessible bathroom on the same storey.

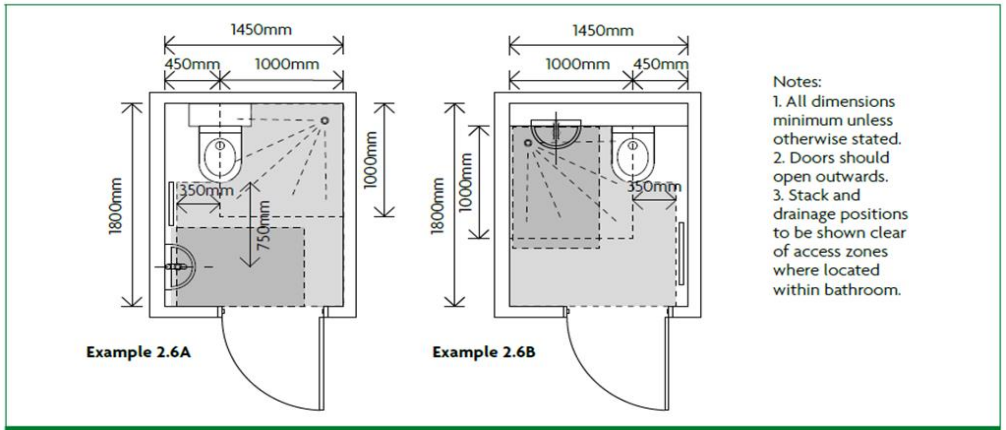

Diagram 2.6 Examples of WC/cloakroom layouts

M4(2) **Accessible and Adaptable Dwellings** - Bathroom provision

- An accessible bathroom must be provided on the same storey as the principal bedroom.
- Choose either a standard design

or use the design guide in dia. 2.5

to create bespoke layout.

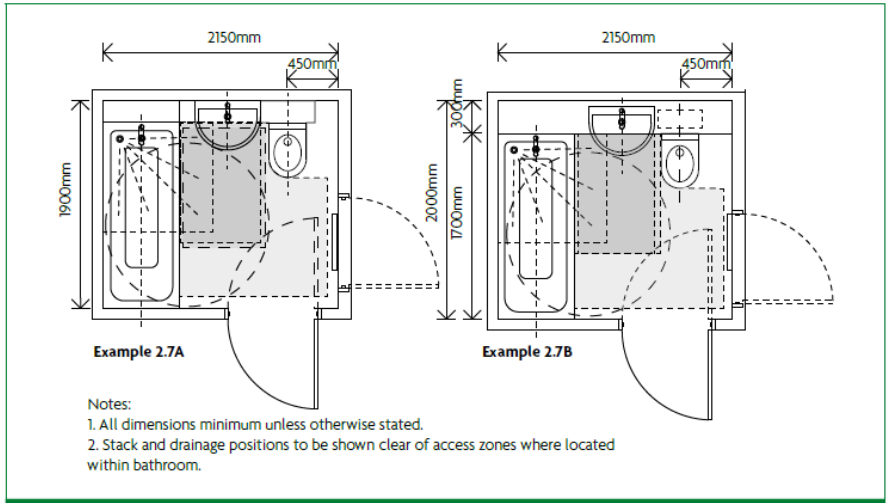

Diagram 2.7 Examples of Category 2 bathrooms

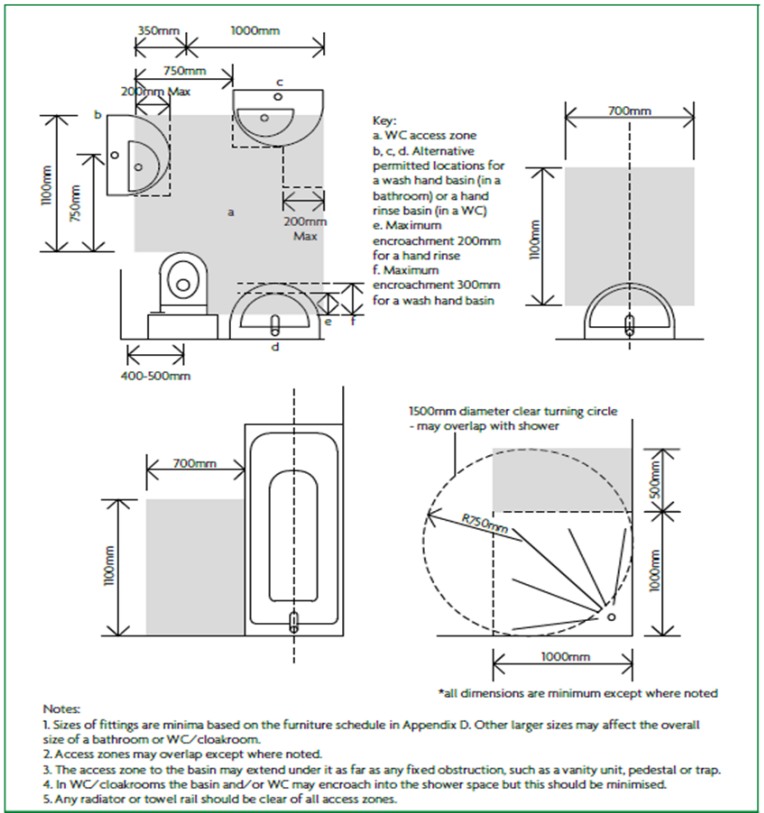

Diagram 2.5 Sanitary fittings, associated clear access zones and permitted encroachment of basins

M4(2) **Accessible and Adaptable Dwellings** – Services & controls

- Consumer units between 1350-1450mm above floor level
- Switches & sockets 450-1200mm above floor level
- Window handle to principal living area between 450-1200mm above floor level, unless automatically controlled
- Handles to other windows 450-1400mm above floor level, unless automatic
- Boiler timer controls and thermostats 900-1200mm above floor level on the boiler unless remote controls elsewhere and accessible as above

Part M Volume 1 – Dwellings

M4(3) – **Category 3** Wheelchair user Dwellings

Requirement	
Optional requirement	*Limits on application*
Category 3 – wheelchair user dwellings	
M4(3) optional requirement	Optional requirement M4(3)—
(1) Reasonable provision must be made for people to—	(a) may apply only in relation to a dwelling that is erected;
(a) gain access to, and	(b) will apply in substitution for requirement M4(1);
(b) use, the dwelling and its facilities.	(c) does not apply where optional requirement M4(2) applies;
(2) The provision made must be sufficient to—	(d) does not apply to any part of a building that is used solely to enable the building or any service or fitting in the building to be inspected, repaired or maintained.
(a) allow simple adaptation of the dwelling to meet the needs of occupants who use wheelchairs; or	Optional requirement M4(3) (2)(b) applies only where the planning permission under which the building work is carried out specifies that it shall be complied with.
(b) meet the needs of occupants who use wheelchairs.	

Key points:

Within curtilage of dwelling (or building containing the dwelling) a step free approach to:

- The dwelling
- Every private entrance door, any private outdoor space, car parking space, and any communal facility for occupants use
- Internal WC at entrance storey
- Other accom. at entrance storey

- The dwelling is to be adaptable for future wheelchair access
- Services are accessible by people with reduced reach

Key Points

M4(3) **Category 3** - Wheelchair user dwellings

Two types of wheelchair user dwelling;

- **Wheelchair Adaptable** Regulations **4(3)a** - applies as default unless local authority has policy requiring dwellings to be;

- **Wheelchair Accessible** (Regulation **4(3)b)**.

- Wheelchair adaptable properties have much greater flexibility in their internal layout (e.g access zones) – they are only intended to be capable of becoming wheelchair accessible after completion.
- Wheelchair accessible requirement likely to meet most common wheelchair user needs.
- Certain provisions require that ability to be accessible is demonstrated

It is the legal duty of the person undertaking building work to inform Building Control which requirements applies.

M4(3) – **Wheelchair Adaptable Dwellings -** Approach to the dwelling

Same principals/requirements as M4(2) with the following extra provisions;

- Must be specifically designed for a wheelchair user
- Route 1200mm min width
- More restrictions on position and length of localised restrictions
- Level spaces 1500 x 1500mm at maximum 10m intervals and at both ends
- Automatic night lighting
- Maximum gradient 1:15
- Where complimentary steps provided, single steps to be avoided
- Car parking (where provided) min 2.4 x 4.8m an access zone 1200mm to one side and rear – INCLUDES garages and car ports

M4(3) **Wheelchair Adaptable Dwellings** – Entrances and external doors

- Communal entrances similar to private.
- Both require 1500mm internal turning circle.
- Both require 300mm leading edge nib maintained for 1800mm, private requires additional 150mm nib to hinge edge for letterbox cage.
- Both require 200mm following edge nib, maintained for 1800mm communal, 1500mm private.
- Both require 1200 x 1200mm canopy.
- Communal: Powered door if >20N force.
- Private: fused spur for future powered door.
- All doors accessing gardens, garages, balconies, terraces etc. to comply with leading / following edge, threshold, width.

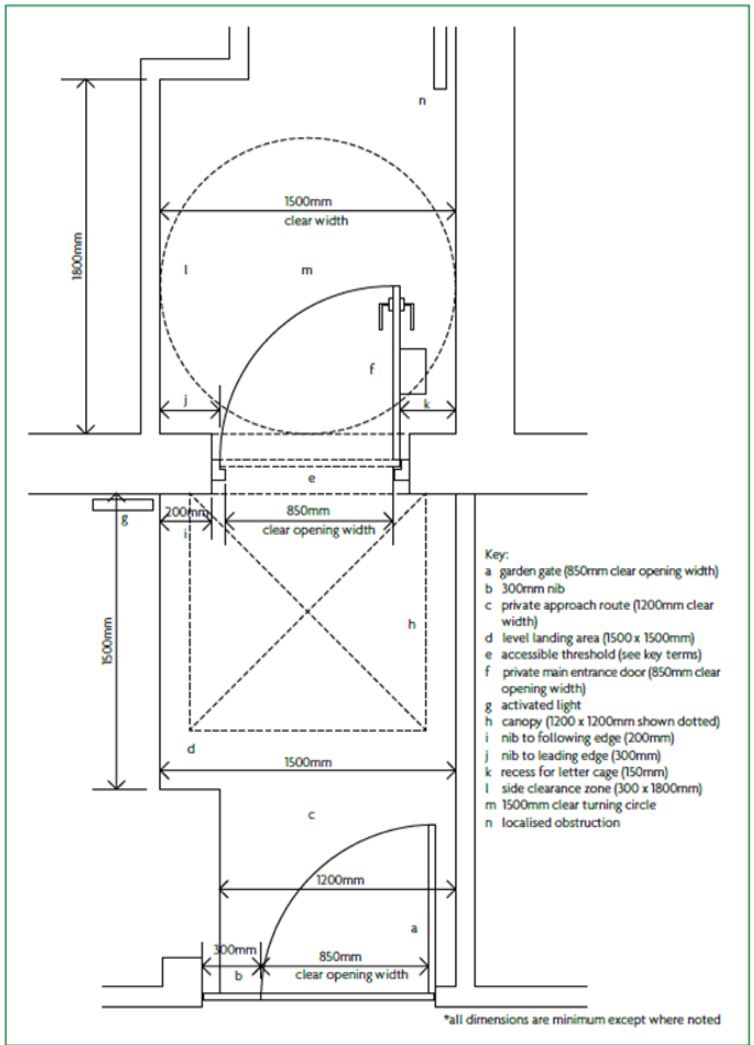

Diagram 3.3 Features associated with principal private entrance

training LABC

Key Points

M4(3) **Category 3** – Internal circulation and storage

- Corridors 1050mm min, internal doors min 850mm – may require wider
- Restrictions on door positions near corners, turning circle required if outward opening door less than 800mm from corner
- 300mm nibs to leading edge and 200mm to following edge
- 1100mm x 1700mm space in entrance storey for wheelchair storage with power socket and1200mm accessible space required to the front.
- Additional requirement for general storage areas, with minimum 900mm headroom

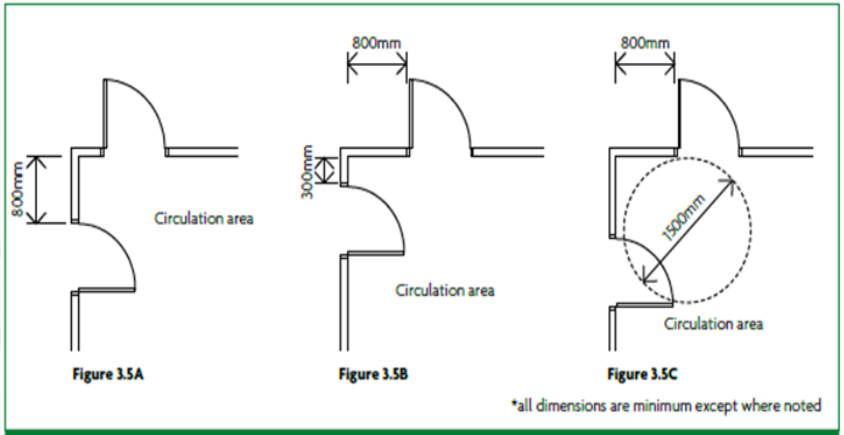

Diagram 3.5 Outward opening doors in a corner

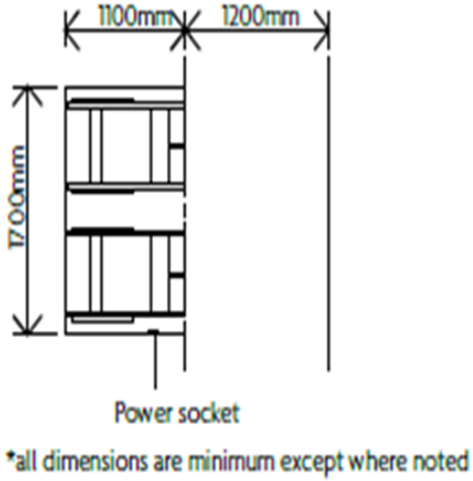

Table 3.1 Minimum area of general built-in storage

Number of bedrooms	1	2	3	4	5	6
Minimum storage area (m^2)	1.5	2.0	2.5	3.0	3.5	4.0

training LABC

M4(3) **Wheelchair Adaptable Dwellings –** Circulation and living spaces

- Staircase as category 2 but requires stair lift power socket
- Additional provision to be made for future provision of a through floor lift:

i) Liftway provision is 1100mm wide x 1650mm long and linking all floors

ii) Drawings demonstrate how liftway provided without structural alteration or affecting compliance with any other requirement

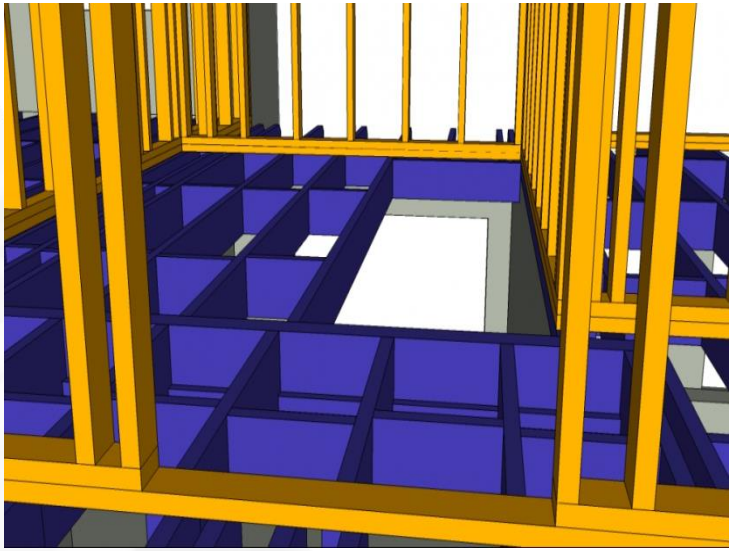

- Minimum size requirements for entrance storey living areas
- Drawings demonstrate how kitchen can be adapted to M4(3b) standard
- Minimum worktop length

Table 3.2 Minimum combined floor area for living, dining, and kitchen space

Number of bedspaces	2	3	4	5	6	7	8
Minimum floor area m²	25	27	29	31	33	35	37

Table 3.3 Minimum length of kitchen worktop, including fittings and appliances, to be fitted at completion for a wheelchair adaptable dwelling

Number of bedspaces	2	3 & 4	5	6–8
Minimum worktop length (mm)	4330	4730	5630	6730

M4(3) **Wheelchair Adaptable Dwellings -** Bedrooms

- One bedroom close to an accessible bathroom.
- Every bedroom:

i) Minimum clear access route of 750mm from door to window;

ii) 1200 x 1200mm manoeuvring space inside the door (when closed) and clear of the bed; and

iii) Ceiling structure strong enough to allow fitting of an overhead hoist capable of carrying 200kg.

- Principal double bedroom:

i) On entrance storey or adjacent storey;

ii) Minimum 3m wide (clear of obstructions) and minimum 13.5m2; and

iii) 1m wide access to each side and foot of bed (clear of furniture) and 1200 x 1200mm manoeuvring space on either side of the bed.

- Every other double or twin bedroom minimum 12.5m2 and 3m wide, 1m clear access to one side of bed
- Every single bedroom 8.5m2 and 2.4m wide.

M4(3) **Wheelchair Adaptable Dwellings -** Sanitary provision

- The ceiling structure to w.c.'s and bathrooms is capable of supporting a hoist at 200kg.
- Soil and vent pipes only adjacent to the w.c. where no alternative.
- Wall structure as per Category 2

Table 3.5 Summary of minimum requirements for sanitary provision in typical dwelling types (dwellings should also comply with relevant detailed requirements set out in paragraphs 3.36-3.43)

Single storey dwelling (typically a flat or bungalow)	
Occupancy	Typical minimum sanitary provision
2 or 3 bedspaces	Bathroom with level access shower
4 bedspaces	Bathroom with level access shower and separate WC/cloakroom
5 bedspaces or more	Bathroom with level access shower and separate WC/cloakroom (or second bathroom). Wheelchair accessible dwellings must also provide both a level access shower and a bath
Two or three storey dwelling (typically a house or maisonette)	
Occupancy	Typical minimum sanitary provision
2 or 3 bedspaces	Bathroom with level access shower on same level as principal bedroom + entrance storey WC/cloakroom (where bathroom not on the entrance storey)
4 bedspaces	Bathroom with level access shower on same level as principal bedroom and entrance storey WC/cloakroom or second bathroom
5 bedspaces or more	Bathroom with level access shower on same level as principal bedroom and entrance storey WC/cloakroom or second bathroom. Wheelchair accessible dwellings must also provide both a level access shower and a bath

M4(3) **Wheelchair Adaptable Dwellings -** Sanitary provision

- W.C. facilities on the entrance storey, either:

i) A wet room with tanking and floor gulley (which may be a bathroom) containing a W.C., basin and level access shower; or

ii) Where the dwelling has a bathroom and W.C. on the same storey the W.C. is reduced provision (dia 3.14).

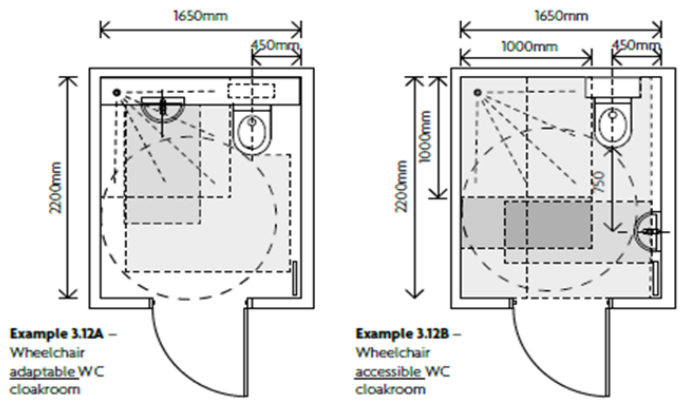

Notes:
1. All dimensions minimum unless otherwise stated.
2. Doors must be capable of opening outwards – in wheelchair adaptable bathrooms the door may open inwards providing that the door can be easily rehung to open outwards (e.g. door stops are planted and easily moved).
3. Stack and drainage positions to be shown clear of access zones where located within bathroom.

Diagram 3.12 Example of wheelchair adaptable WC/cloakroom layout with potential to be wheelchair accessible

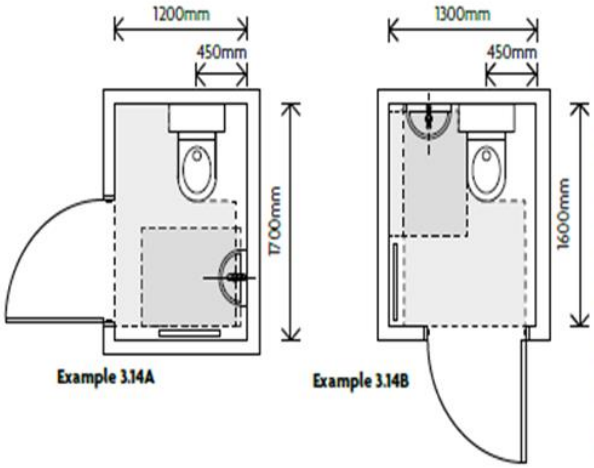

Notes:
1. All dimensions minimum unless otherwise stated.
2. Doors should open outwards.
3. Where future shower provision is provided in entrance level WC's, this need not be provided in adaptable bathrooms on other storeys.
3. Stack and drainage positions to be clear of access zones shown where located within bathroom.

Diagram 3.14 Examples of compliant second WC/cloakrooms where on the same floor level as the first WC

training LABC

M4(3) **Wheelchair Adaptable Dwellings -** bathroom provision

- Dwellings up to 4 bedspaces: bathroom on same level as principal bedroom with W.C., basin, and a level access shower with ability to have bath installed above it (unless bath installed elsewhere on same storey). The bath may be installed above the level access drain at completion stage.
- Dwellings of 5 or more bedspaces: a bathroom and a shower room, either of which may be an en-suite.
- Drawings should indicate how the bathroom can be adapted to wheelchair accessible.

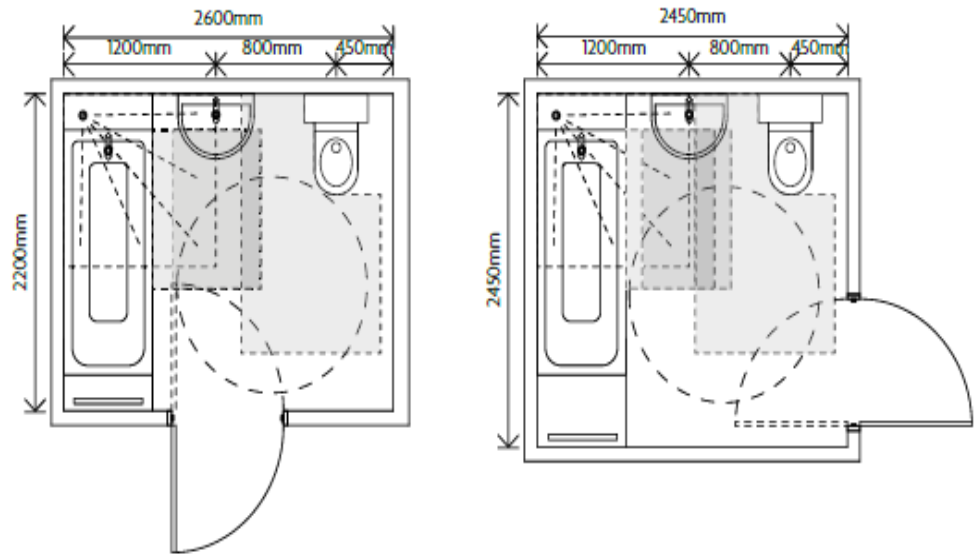

Example 3.15A – wheelchair adaptable bathroom (based on wheelchair accessible layout 3.16A)

Example 3.15B – wheelchair adaptable bathroom (based on wheelchair accessible layout 3.16B)

Notes:
1. All dimensions minimum unless otherwise stated.
2. Doors must be capable of opening outwards – in wheelchair adaptable bathrooms the door may open inwards providing that the door can be easily rehung to open outwards (e.g. door stops are planted and easily moved).
3. Stack and drainage positions to be shown clear of access zones where located within bathroom.

Diagram 3.15 Examples of wheelchair adaptable bathroom layouts with potential to be wheelchair accessible

M4(3) **Wheelchair Adaptable Dwellings -** services and controls

- Consumer units 1350-1450mm above floor level as previous
- Switches, sockets, stopcocks and controls (except radiators) 700-1100mm above floor level and 700mm from internal corners, not positioned behind appliances
- Handles to 1 window in principal living area 700-1100mm unless remotely operated, all others 450-1200mm
- Easy grip door handles, locks and latches 850-1000mm
- Light switches on wide rocker or individual plates
- Double socket switches positioned at outer ends
- Suitable provision for bedhead controls (power, broadband, tv, phone, door entry, light switch) either provided or future provision through conduit and draw wires
- Taps and bath controls suitable for one-handed or limited grip operation.

M4(3) **Wheelchair Adaptable Dwellings -** private outdoor space

Definition: gardens, balconies, roof terraces

- Paved areas have suitable surfaces
- Minimum width of outdoor spaces is 1500mm
- 1500mm level turning circle free of door swing and at ends of path
- A level or gently sloping path to every private store, refuse or recycling
- Doors to stores and gates minimum 850mm width

Wheelchair Accessible Dwellings

M4(3) **Category 3(b) Key Differences**

The differences apply only to internal features, not access or communal routes

- Wheelchair accessible lift installed with 1500mm turning circle at every level and power operated door
- Radiator controls 450 – 700mm above floor level
- Kitchen appliances have isolators 700-1000mm above floor level
- W.C flush controls easily gripped and positioned on the front of the cistern on the transfer side
- W.C. pans minimum 400mm high
- Clear zone beneath basins 400-600mm high
- Key differences to kitchen and bathroom design

Wheelchair Accessible Dwellings

M4(3) **Category 3(b) Kitchens**

- A continuous section of worktop includes sink, drainer and hob
- Worktop is either height adjustable or re-fixable
- Water supply flexible, drainage flexible or adaptable
- Clear leg space underneath up to 700mm above floor level, no fixed white goods
- Sink is insulated (prevents scalding) and not more than 150mm deep
- Lever taps
- Space for an installed oven centred at 800-900mm above floor level
- At least 400mm of worktop to one side of ovens and fridges

Table 3.3 Minimum length of kitchen worktop, including fittings and appliances, to be fitted at completion for a wheelchair adaptable dwelling

Number of bedspaces	2	3 & 4	5	6–8
Minimum worktop length (mm)	4330	4730	5630	6730

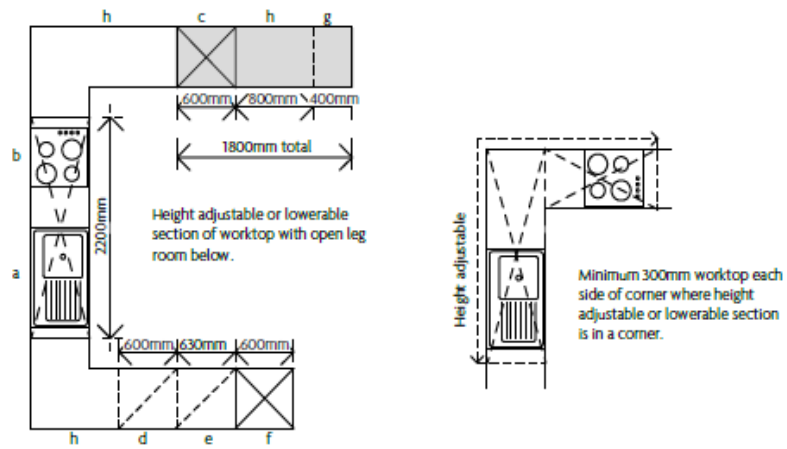

Wheelchair accessible layout

Key:

a sink and drainer
b hob
c suitable space for built-in oven (c/l 800-900mm)
d dishwasher
e washing machine
f fridge freezer
g recycling
h storage base units (inc. corner units)

Allow for shallow, insulated sink bowl with swivel, mixer tap and flexible plumbing and provide a min. 400mm length of worktop to at least one side of the oven and fridge/freezer.

*all dimensions are minimum except where noted

Diagram 3.8 Example of a wheelchair accessible kitchen layout

Wheelchair Accessible Dwellings

M4(3) **Category 3(b) – Sanitary Facilities**

Different diagrams are provided illustrating accessible bathroom layouts and clearances. Rooms take up significantly more space

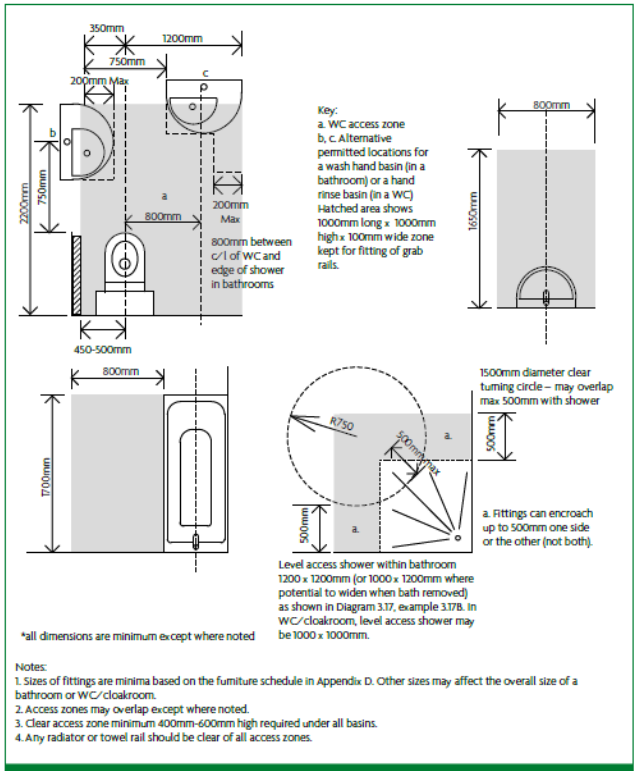

Notes:
1. Sizes of fittings are minima based on the furniture schedule in Appendix D. Other sizes may affect the overall size of a bathroom or WC/cloakroom.
2. Access zones may overlap except where noted.
3. Clear access zone minimum 400mm-600mm high required under all basins.
4. Any radiator or towel rail should be clear of all access zones.

Diagram 3.11 Sanitary fittings, associated clear access zones and permitted encroachment of basins – wheelchair accessible

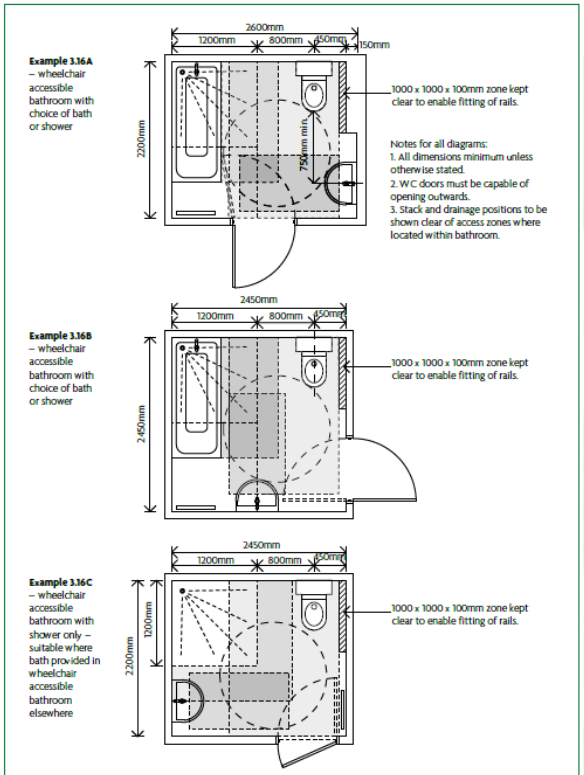

Diagram 3.16 Examples of wheelchair accessible bathrooms

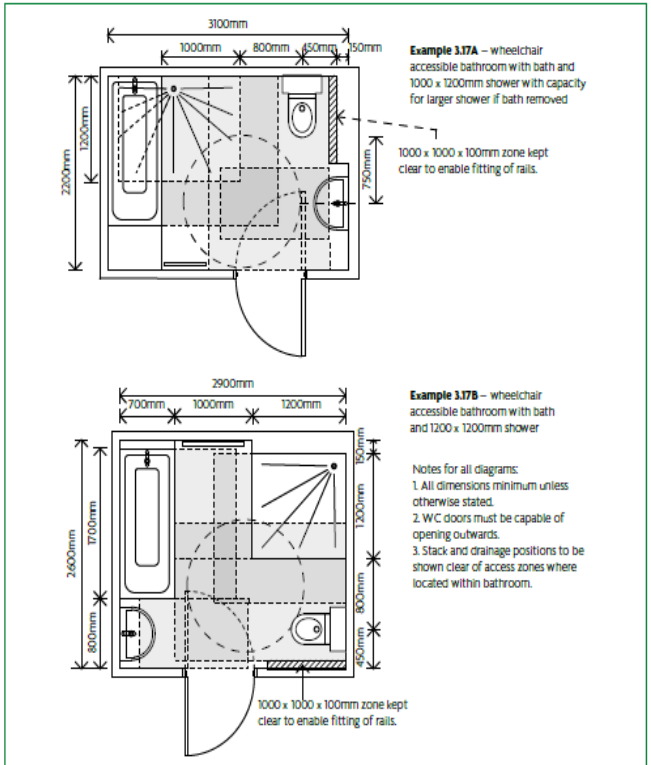

Diagram 3.17 Examples of wheelchair accessible bathrooms with both bath and shower

training LABC

Part M – Any Questions?

Part Q - Security – 1st October 2015

Requirement

Requirement	*Limits on application*
PART Q SECURITY **Unauthorised access**	
Q1. Reasonable provision must be made to resist unauthorised access to—	Requirement Q1 applies only in relation to new dwellings.
(a) any dwelling; and	
(b) any part of a building from which access can be gained to a flat within the building.	

Including Change of Use

Performance

Requirement Q1 applies to easily accessible doors and windows that provide access in any of the following circumstances:

a. into a dwelling from outside

b. into parts of a building containing flats from outside

c. into a flat from the common parts of the building.

In the Secretary of State's view, doors and windows will meet requirement Q1 if they can resist physical attack by a casual or opportunist burglar by being both:

a. sufficiently robust

b. fitted with appropriate hardware.

Easily accessible

Either:

- a window or doorway, any part of which is within 2m vertically of an accessible level surface such as the ground or basement level, or an access balcony, or
- a window within 2m vertically of a flat or sloping roof (with a pitch of less than 30°) that is within 3.5m of ground level.

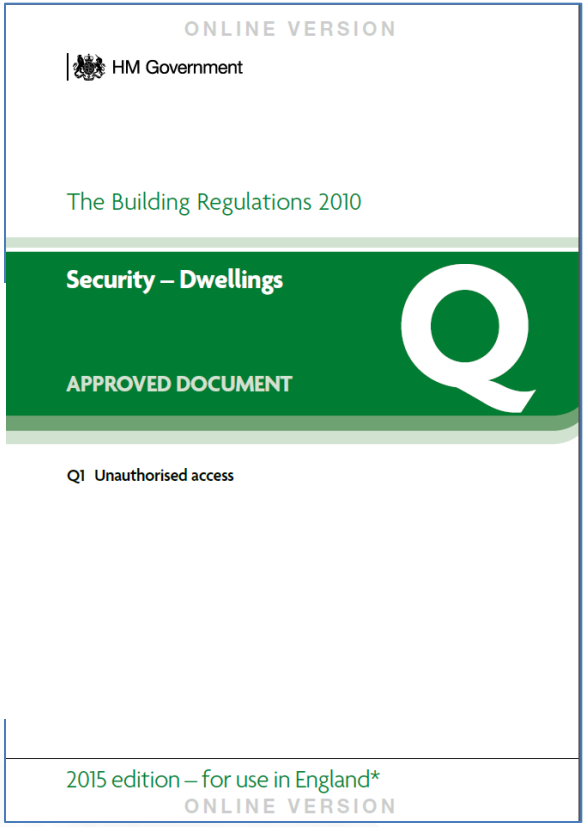

training LABC

Part Q – Security - Doors

Design of secure doorsets

1.2 Secure doorsets should be either:

a. manufactured to a design that has been shown by test to meet the requirements of British Standards publication PAS 24:2012, or

b. designed and manufactured in accordance with Appendix B.

Installation and fixing of secure doorsets

1.5 Frames should be mechanically fixed to the structure of the building in accordance with the manufacturer's installation instructions.

1.6 Lightweight framed walls should incorporate a resilient layer to reduce the risk of anyone breaking through the wall and accessing the locking system.

The resilient layer should be timber sheathing at least 9mm thick, expanded metal or a similar resilient material. The resilient layer should be to the full height of the door and 600mm either side of the doorset.

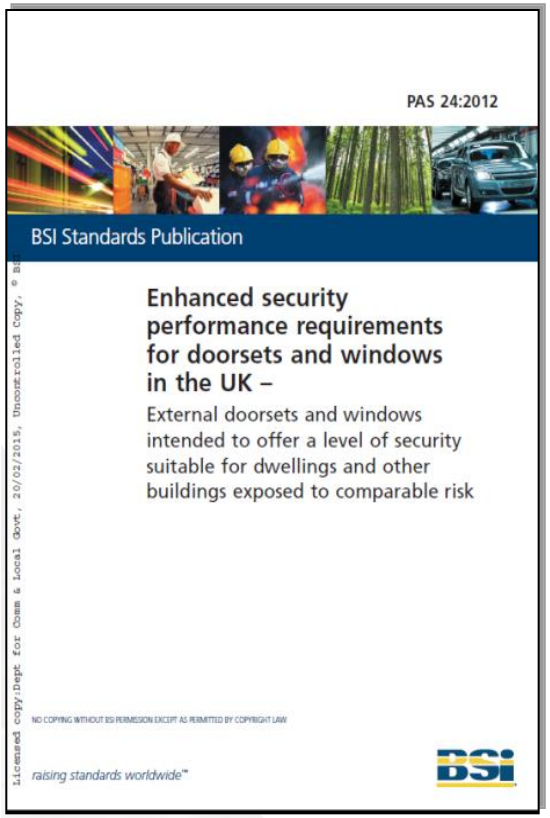
PAS 24:2012

BSI Standards Publication

Enhanced security performance requirements for doorsets and windows in the UK –

External doorsets and windows intended to offer a level of security suitable for dwellings and other buildings exposed to comparable risk

Licensed copy:Dept. for Comm & Local Govt., 20/02/2015, Uncontrolled Copy, © BSI

NO COPYING WITHOUT BSI PERMISSION EXCEPT AS PERMITTED BY COPYRIGHT LAW

raising standards worldwide™

BSI

Part Q – Security - Doors

Appendix B Requirements for bespoke timber doors:

- Applies to doors up to 1000 x 2000mm
- Timber solid or laminated, minimum density 600kg/m2
- Rails, stiles and muntins min 44mm thick, with minimum 32mm retained timber thickness after rebating
- Panels 15mm thick, maximum 230mm to smallest dimension
- Multipoint locking to published standards; or mortice and rim locks to published standards
- Letterplates 260mm x 40mm with hindrance flaps
- Door viewer or glazing with additional door chain, or door entry system
- Class P1A security glass

Part Q Security - Windows

General

2.1 Ground floor, basement and other easily accessible windows (including easily accessible rooflights) should be secure windows in accordance with paragraphs 2.2 and 2.3.

Design of secure windows

2.2 Windows should be made to a design that has been shown by test to meet the security requirements of British Standards publication PAS 24:2012.

NOTE: Windows satisfying other standards that provide similar or better performance are also acceptable. These standards include:

- STS 204 Issue 3:2012
- LPS 1175 Issue 7:2010 security rating 1
- LPS 2081 Issue 1:2015 security rating A.

Further advice is available in Secured by Design's *New Homes 2014*.

Installation and fixing of secure windows

2.3 Frames should be mechanically fixed to the structure of the building in accordance with the manufacturer's installation instructions.

Potential problem?

- Change of use: all accessible windows and doors to be changed!
- Change of use, conservation area, requires timber windows, possibly even single glazed?
- Unlike Appendix B for doors, no alternative compliance methods for windows…
- So if they aren’t tested to specific standards, how do they comply?

Part Q – Any Questions?

Other Changes: Part E4 – 6th April 2015

- **Building Bulletin 93: Acoustic Design of Schools: Performance Standards for Schools** replaces Building Bulletin 93, Acoustic Design of Schools, 2003
- The aim of the acoustic performance standards is to provide acoustic conditions in schools that:

• facilitate clear communication of speech between teacher and student, and between students

• do not interfere with study activities

- The new BB93 contains performance standards only – design guidance is contained in a separate document : **Acoustics of schools: a design guide**, published jointly by the ANC and the IOA.

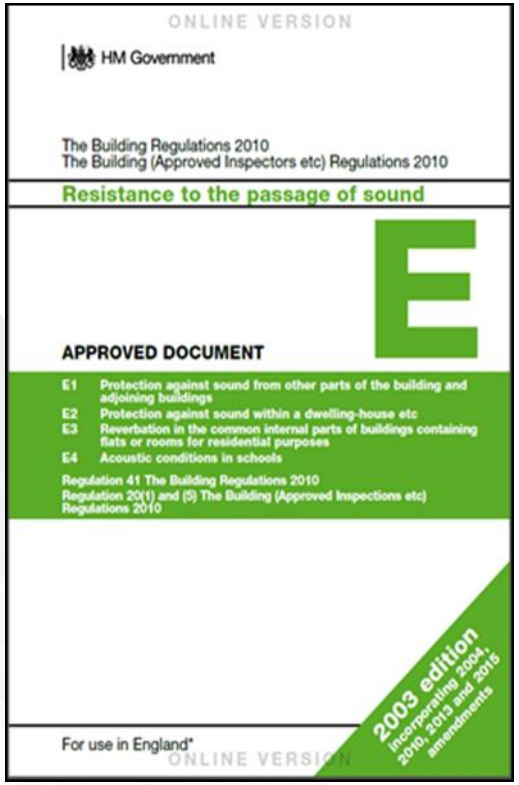
ONLINE VERSION

HM Government

The Building Regulations 2010
The Building (Approved Inspectors etc) Regulations 2010

Resistance to the passage of sound

E

APPROVED DOCUMENT

E1 Protection against sound from other parts of the building and adjoining buildings
E2 Protection against sound within a dwelling-house etc
E3 Reverberation in the common internal parts of buildings containing flats or rooms for residential purposes
E4 Acoustic conditions in schools

Regulation 41 The Building Regulations 2010
Regulation 20(1) and (5) The Building (Approved Inspections etc) Regulations 2010

2003 edition
incorporating 2004, 2010, 2013 and 2015 amendments

For use in England*

ONLINE VERSION

Part H6 – Waste management – 1st October 2015

External Waste Storage

- Paragraph 1.13 states external waste storage design should be carefully considered where it is in a publicly accessible place or open area
- Reference is made to NHBC Foundation good practice guidance on external waste storage Ref. NF60
- Paragraph 0.3 makes clear that the provisions in H6 also apply where use e.g. from a house to flats

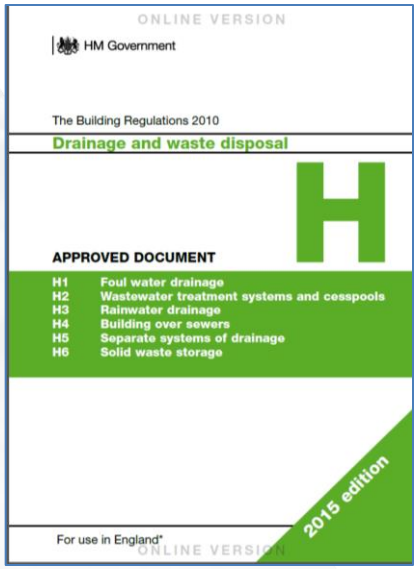
ONLINE VERSION

HM Government

The Building Regulations 2010

Drainage and waste disposal

H

APPROVED DOCUMENT

H1 Foul water drainage
H2 Wastewater treatment systems and cesspools
H3 Rainwater drainage
H4 Building over sewers
H5 Separate systems of drainage
H6 Solid waste storage

2015 edition

For use in England*

ONLINE VERSION

What next for energy efficiency?

THE CODE FOR SUSTAINABLE HOMES™

training LABC

Let’s focus on getting L1A 2013 right!

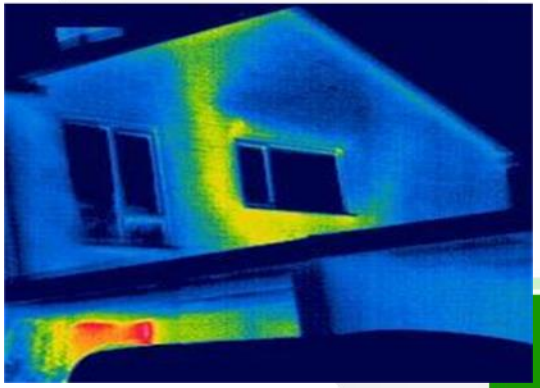

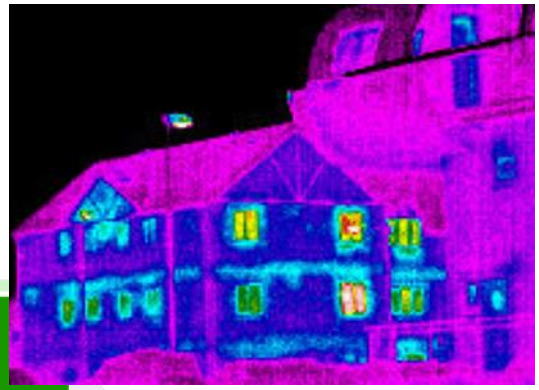

ONLINE VERSION

HM Government

The Building Regulations 2010

Conservation of fuel and power

APPROVED DOCUMENT

L1A

L1A Conservation of fuel and power in new dwellings

2013 edition – for use in England*

ONLINE VERSION

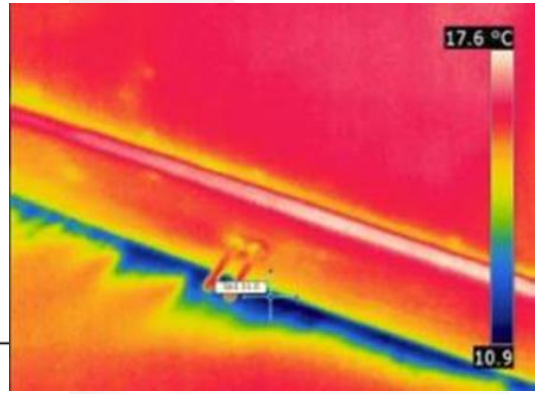

training LABC

The Performance Gap -what is it?

- the difference between the ***intended*** energy performance predicted by the designer, and the ***actual*** energy performance when the building is handed over and in use.

- How it's built and occupied falls short of expectations, and does not meet the designed energy standards (Part L).

Does it do what it says on the tin?

training LABC

Put another way ...

.. You were told that your heating will cost you this many pints of beer …

training LABC

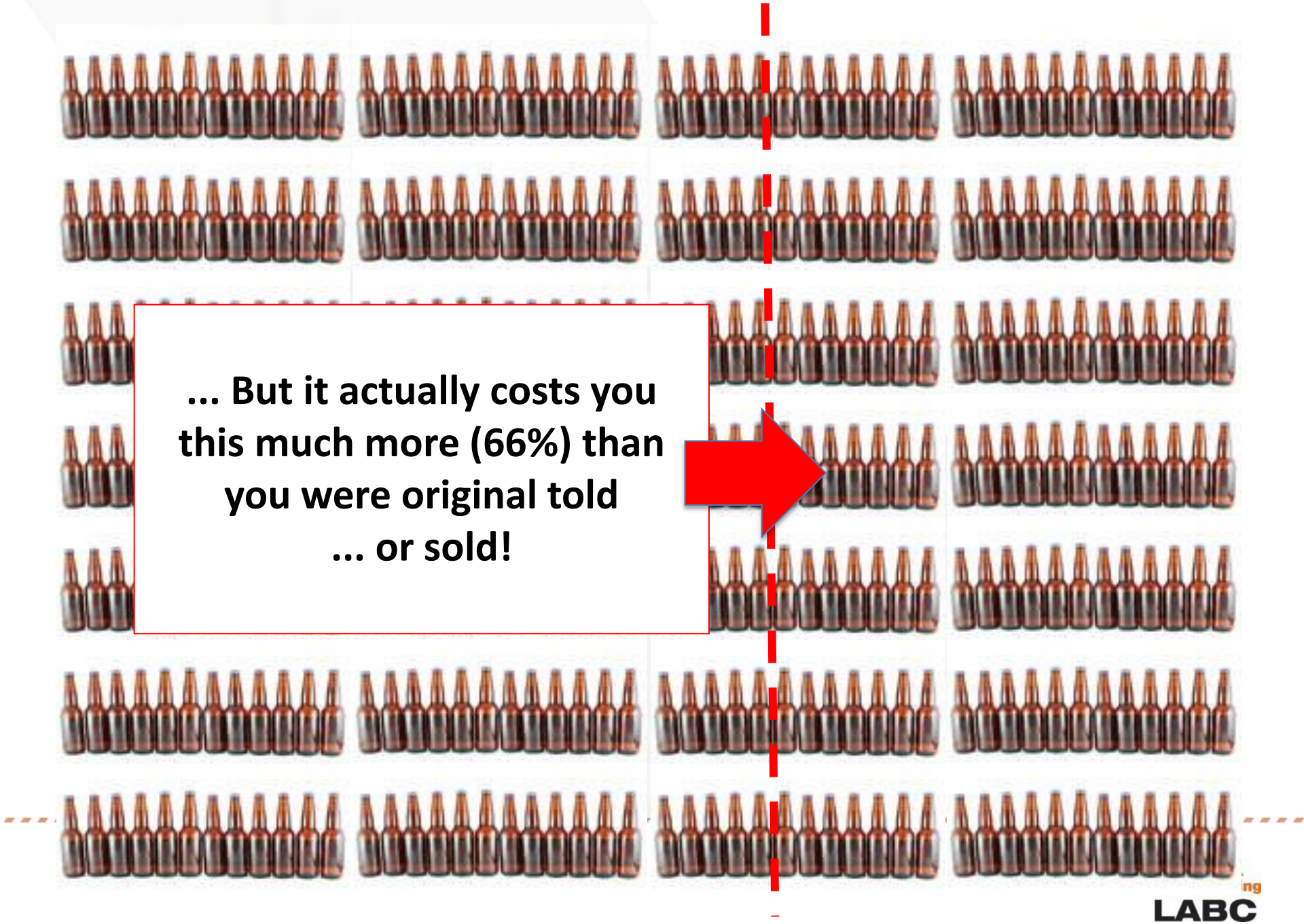
... But it actually costs you this much more (66%) than you were original told ... or sold!

LABC

The challenge…

“we require immediate pan-industry activity to trigger a cultural shift so that as-built performance becomes a core element of delivering high quality new housing”

ZERO CARBON HUB 2014

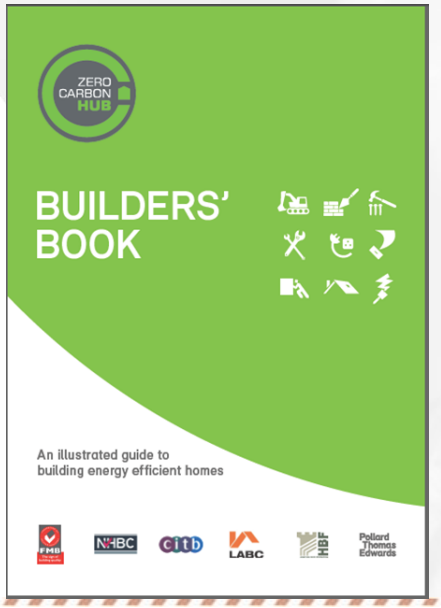

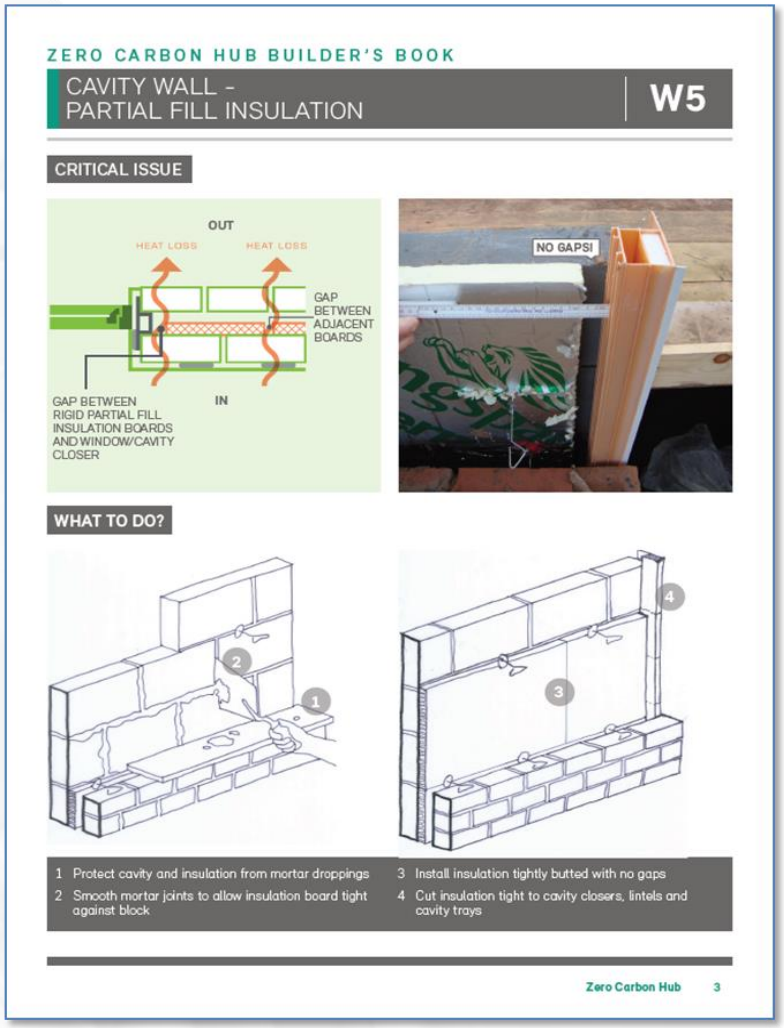

training LABC

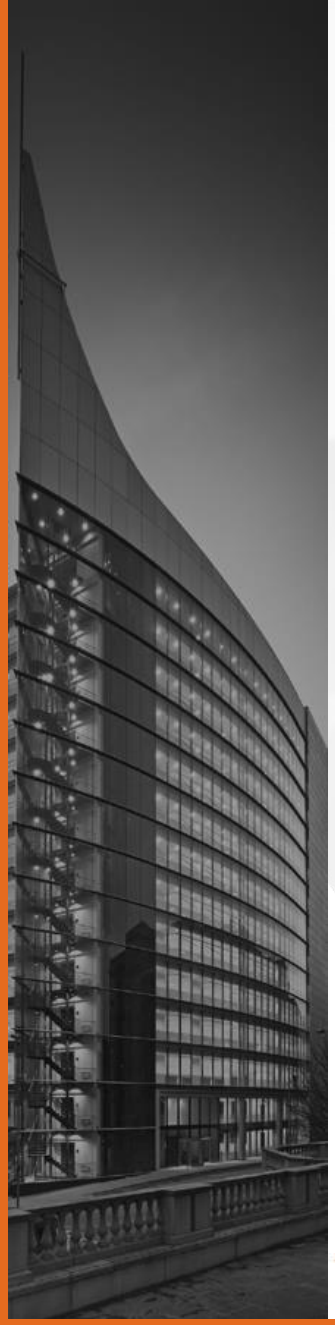

Thankyou